NOTE: Information herein is believed by Southwest Microwave, Inc. to be accurate. However, Southwest Microwave assumes no responsibility for any omissions or errors or inaccuracies for its use or for any infringements of patents or other rights of third parties that may result from its use. Data is intended for informational purpose only and does not constitute a contract of sale or any express or implied warranty, including any warranty of merchant ability or fitness for a particular purpose.

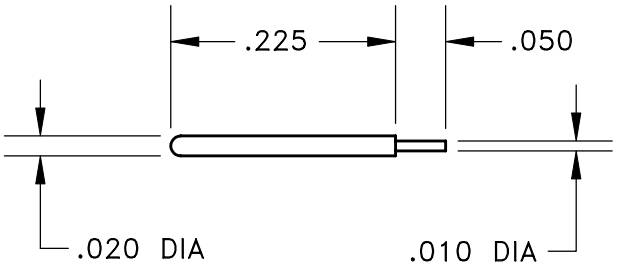

LAUNCH PIN
290–13P

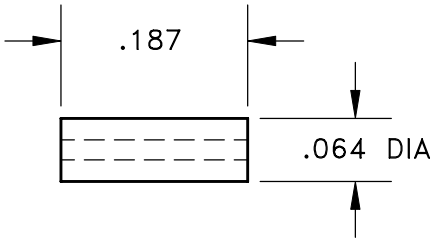

DIELECTRIC
290–13D

APPLICATION

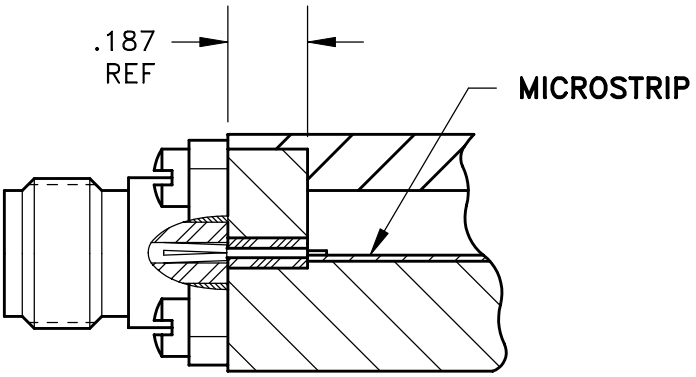

CATALOG CONNECTOR MODELS

211–03,–18,–26SF
212–03,–10,–25SF
213–03,–17,–30SF
214–03,–17,–30SF

LAUNCH PIN: BeCu UNS–C17300 PER ASTM–B–196/197. GOLD PLATE PER MIL–G–45204.

DIEL: VIRGIN TFE FLUOROCARBON PER ASTM–D–1710, TYPE 1, GRADE 1, CLASS B, AND ASTM–D–1457.

MATERIAL & FINISH

REV: B4 ECN: 6300 DATE: 6–30–95

DRAWN	DATE	APRVD.	DATE
SLM	5–9–91	JK	5/91

SOUTHWEST MICROWAVE
Southwest Microwave, Inc.
9055 South McKemy Street
Tempe, Arizona 85284–2946
Telephone (480) 783–0201
Fax (480) 783–0360

TITLE
290–13G
LAUNCH PIN, .020 DIA X .225 LONG WITH .187 LONG DIELECTRIC

DATE	DWG. NO.	REV.
5–9–91	79B51560	B5
SHEET 1 OF 1		